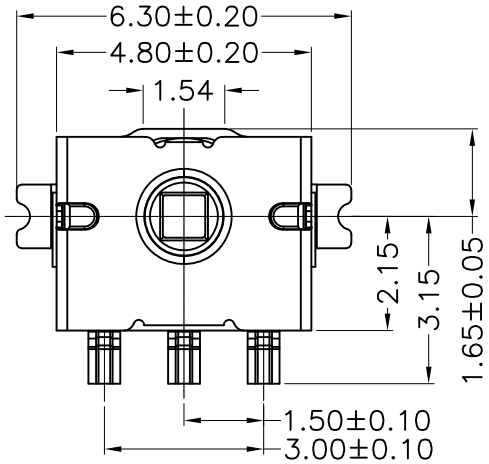


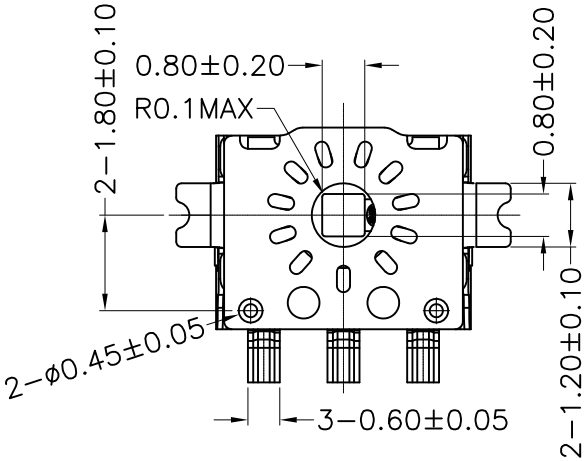


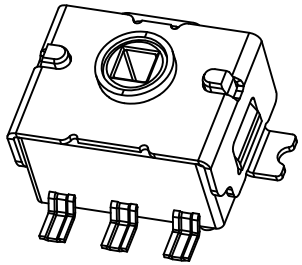

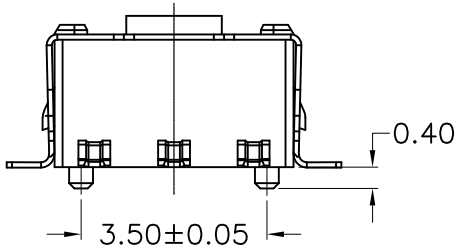


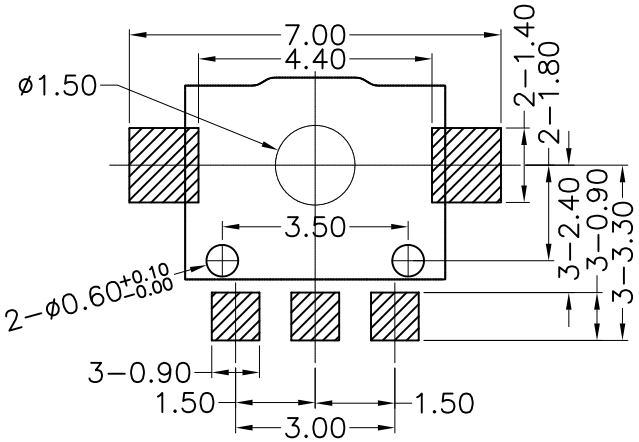


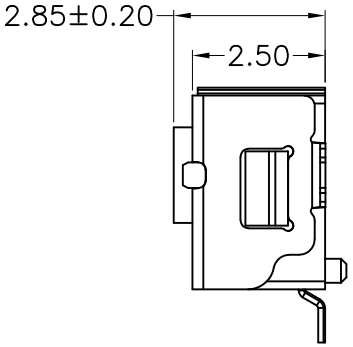


Specification:
1.Rating ：DC 5V 0.01A;
2.Resolution:12 pulses/360°for each phase,
12 Detents 12 Pulse;
3.Insulation resistance：≥50MΩ (50VDC).
4.Withstand voltage：50VAC.
5.Rotational torque:5-20gf.cm;
6.life test：100000cycles min.
7.Operation temperature range:-40℃~85℃.
8.Preservative temperature range:-40℃~85℃.

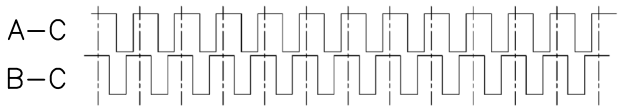


12pulse 12click

深圳市华宇创精密电子有限公司

| | | | |
|---|---|---|---|
| TOLERANCE: X.X ±0.30 X.XX ±0.25 X.XXX ±0.15 X.° ±2° X.X° ±0.5° | DRAWED BY : 陈一鸣 | DATE : 2014-02-23 | PART NAME: EC04全码 H=2.85mm编码器 |
| | CHECKED BY: 马跃 | DATE : 2014-02-23 | PART NO. HYC-EC04-285-X |
| | | | MOLD NO. |
| UNIT: mm [inch] | APPROVED BY: 邱敏 | DATE : 2014-02-23 | DRAW NO: HYC-2603131636 |
| SCALE:1:1 SIZE: A4 | | | SHEET NO. 1 OF 1 |