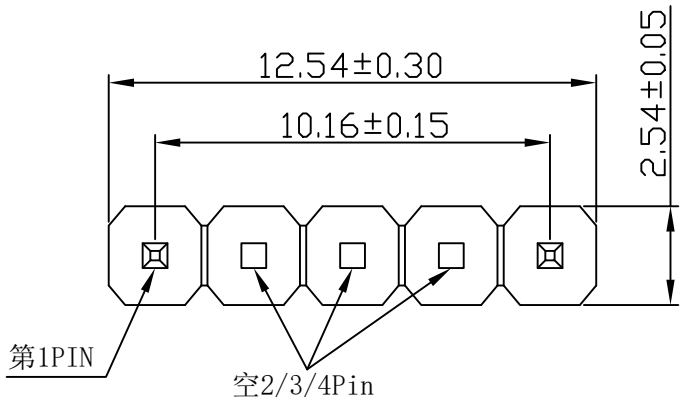

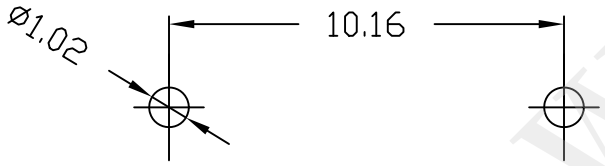

P.C.B Hole Layout

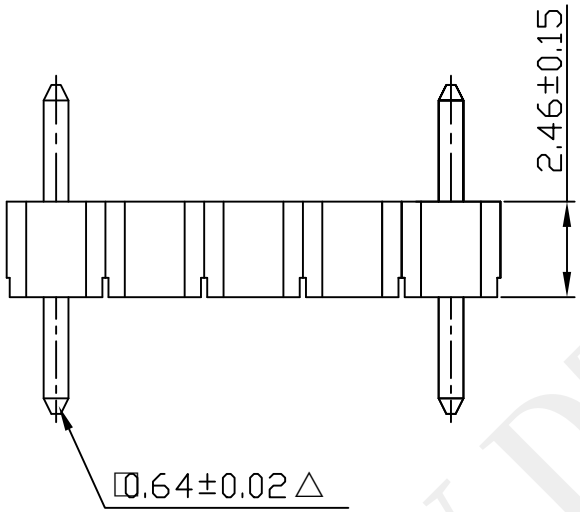

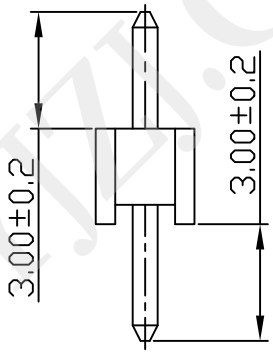

Specifications

Current Rating	:3 Amps
Insulator Resistance	:5000 Megohms Min.
Dielectric Withstanding	:AC 1000 V
Operating Temperature	:-40° C - +105℃
Contact Material	:Copper Alloy
Insulator Material	:Polyester,UL 94V-0
Standard	:PBT

Finish: Tin,Gold or Duplex Plated
Standard: Gold Flash all over
Note:
Duplex Plating: Gold Plated on contact area,
Tin on solder area

深圳市华宇创精密电子有限公司

TOLERANCE: X.X ±0.30, X.XX ±0.25, X.XXX ±0.15, X.° ±2°, X.X° ±0.5°	DRAWED BY : 陈一鸣	DATE : 2014-02-23	PART NAME: 2.54PH H2.5 1x5Pin 180度 空第2.3.4P
	CHECKED BY: 马跃	DATE : 2014-02-23	PART NO. HYC0-25M254-1X5(2.3.4P)
UNIT: mm [inch]			MOLD NO.
	APPROVED BY: 邱敏	DATE : 2014-02-23	DRAW NO: HYC-2610281108
SCALE:1:1 SIZE: A4			SHEET NO. 1 OF 1

WWW.DZYJZJ.COM