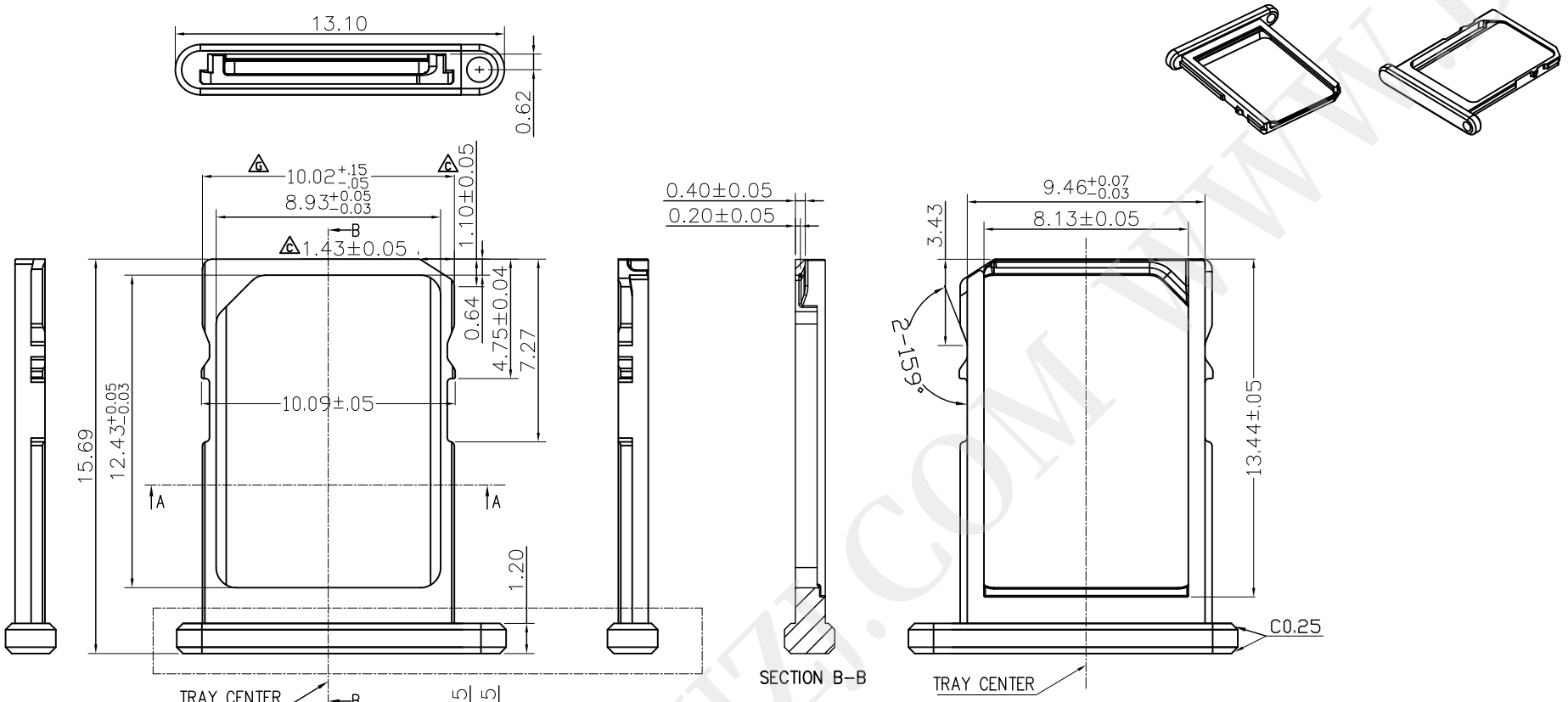

备注note：

1. 材　料：3号锌合金(Zamak3)
1. Material：No. 3, zinc alloy(Zamak3)
2. 加工工艺：压铸成型，SIM接触面局部绝缘处理.
2. Process：Die casting molding, SIM contact local insulation treatment.
3. 外观处理：产品全周无毛刺，外观无划伤、压痕、油污、裂痕、扭曲变形等不良。
3. Appearance：Product the week without burr, appearance no scratch and indentation、The oil bad distortion, cracks, deformation, etc。

深圳市华宇创精密电子有限公司

TOLERANCE: X.X ±0.30, X.XX ±0.25, X.XXX ±0.15, X.° ±2°, X.X° ±0.5°	DRAWED BY：陈一鸣	DATE：2014-02-23	PART NAME: NANO SIM 卡托 有孔 亮镍	
	CHECKED BY: 马跃	DATE：2014-02-23	PART NO.	HYC-041
			MOLD NO.	
UNIT: mm [inch]	APPROVED BY: 邱敏	DATE：2014-02-23	DRAW NO:	HYC-2506071528
SCALE:1:1 SIZE: A4			SHEET NO.	1 OF 1

WWW.DZYJZJ.COM