www.dzyjzj.com Tel:0755-27575531 Fax:0755-27576267

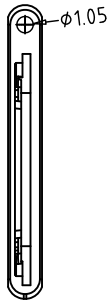

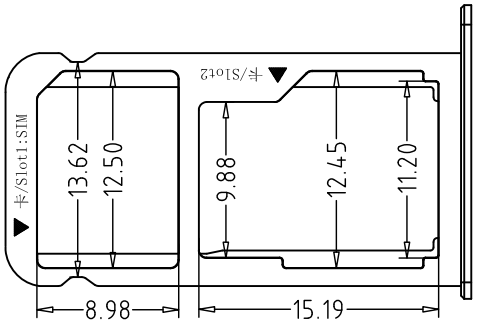

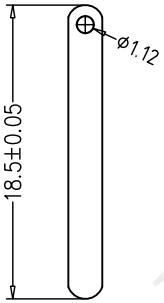

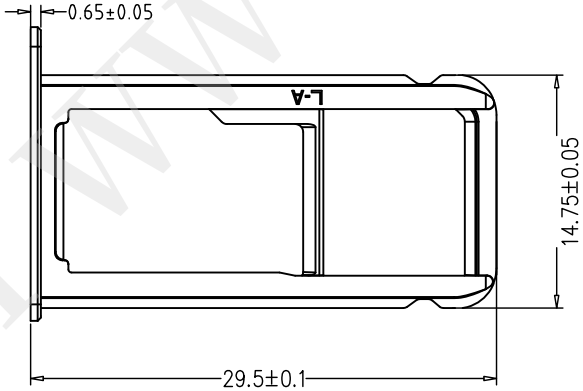

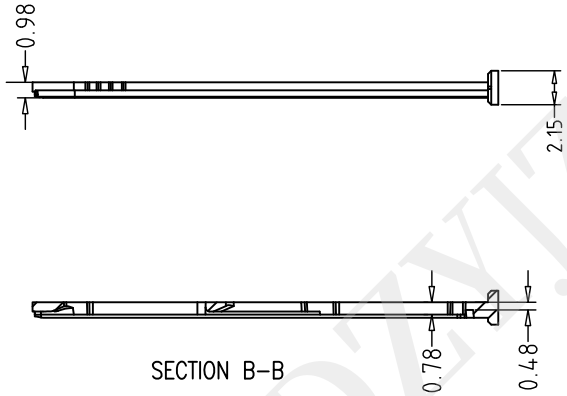

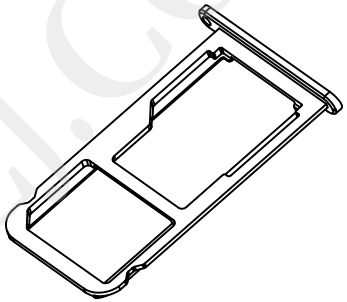

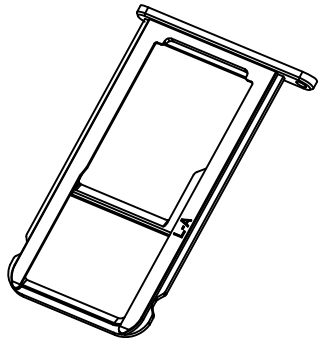

深圳市华宇创精密电子有限公司

TOLERANCE: X.X ±0.30, X.XX ±0.25, X.XXX ±0.15, X.° ±2°, X.X° ±0.5°	DRAWED BY : 陈一鸣	DATE : 2014-02-23	PART NAME: 三选二卡托
	CHECKED BY: 马跃	DATE : 2014-02-23	PART NO. HYC-040
			MOLD NO.
UNIT: mm [inch]	APPROVED BY: 邱敏	DATE : 2014-02-23	DRAW NO: HYC-2412181108
SCALE:1:1 SIZE: A4			SHEET NO. 1 OF 1

WWW.DZYJZJ.COM