www.dzyjzj.com Tel:0755-27575531 Fax:0755-27576267

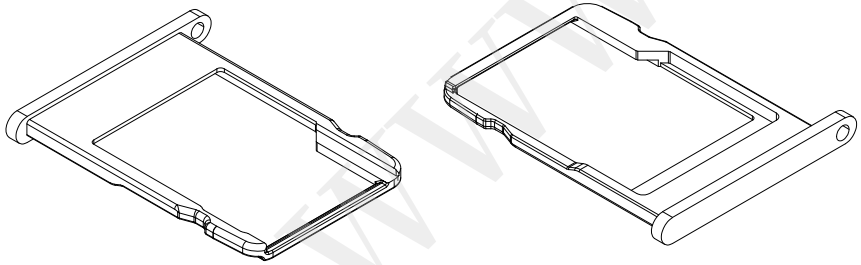

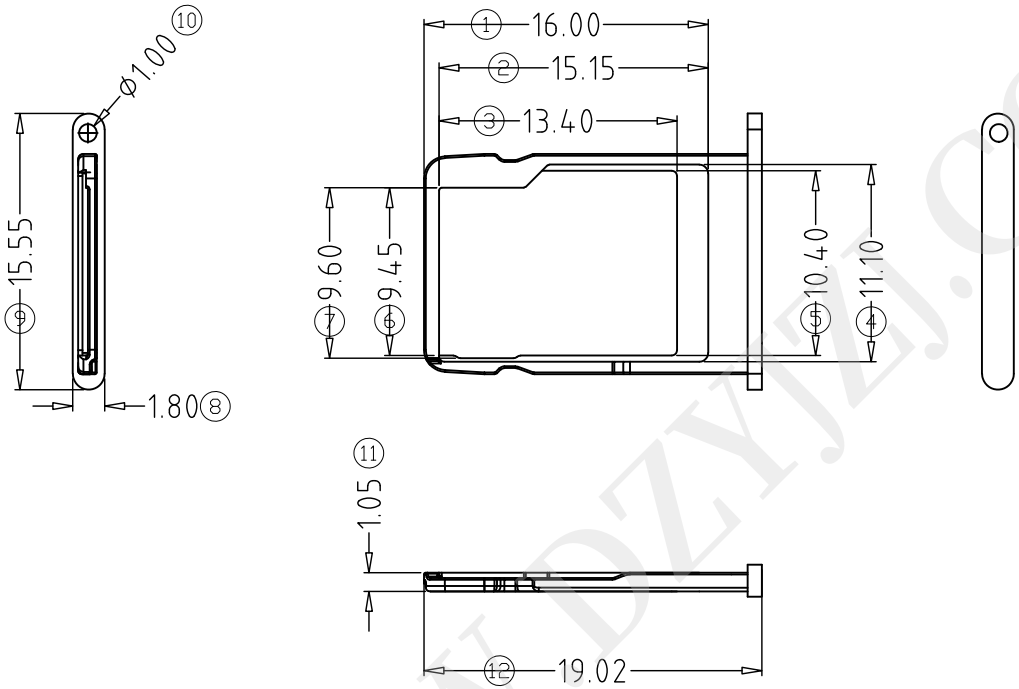

深圳市华宇创精密电子有限公司				
TOLERANCE: X.X ±0.30, X.XX ±0.25, X.XXX ±0.15, X.° ±2°, X.X° ±0.5°	DRAWED BY : 陈一鸣	DATE : 2014-02-23	PART NAME: TF 卡托	
	CHECKED BY: 马跃	DATE : 2014-02-23	PART NO.	HYC-034
UNIT: mm [inch]	APPROVED BY: 邱敏	DATE : 2014-02-23	MOLD NO.	
SCALE:1:1 SIZE: A4			DRAW NO:	HYC-2212021437
			SHEET NO.	1 OF 1

WWW.DZYJZJ.COM