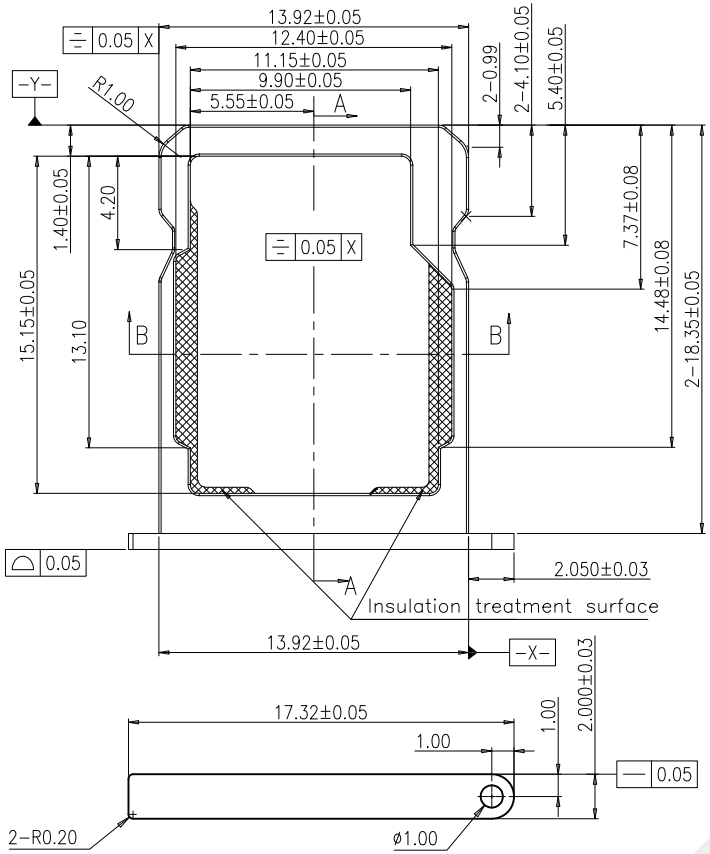

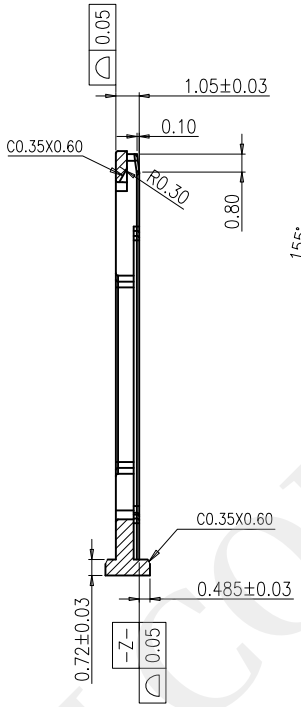

SECTION A-A

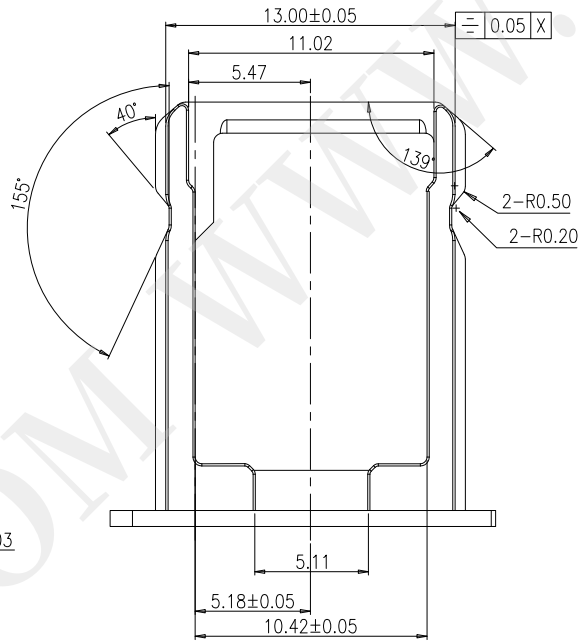

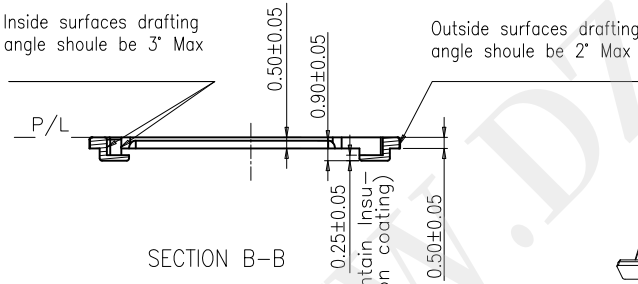

SECTION B-B

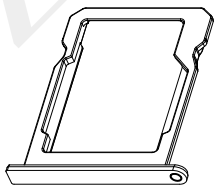

NOTES: 1.Material: SUS17-4PH
2.Finish: Reference to customer request;
The roughness ▽ of all surfaces should meet Ra<0.5um; Rz<4.0um.
3.Harmful material control please follow "SS-00259-1"
4.The dimension marked ☆ should be checked by QC and process engineer,and should also check the CPK data.

深圳市华宇创精密电子有限公司 HOAUC				
TOLERANCE: X.X ±0.30 X.XX ±0.25 X.XXX ±0.15 X.° ±2° X.X° ±0.5°	DRAWED BY : 陈一鸣	DATE : 2014-02-23	PART NAME: 二选一 卡托	
	CHECKED BY: 马跃	DATE : 2014-02-23	PART NO.	HYC-026
			MOLD NO.	
UNIT: mm [inch]	APPROVED BY: 邱敏	DATE : 2014-02-23	DRAW NO:	HYC-2205071102
SCALE:1:1 SIZE: A4			SHEET NO.	1 OF 1

WWW.DZYJZJ.COM