

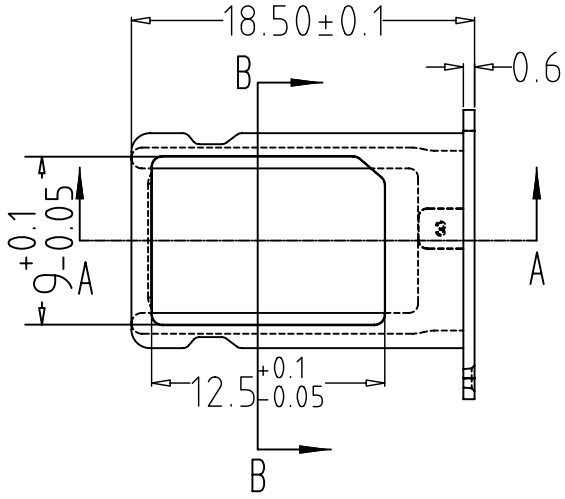

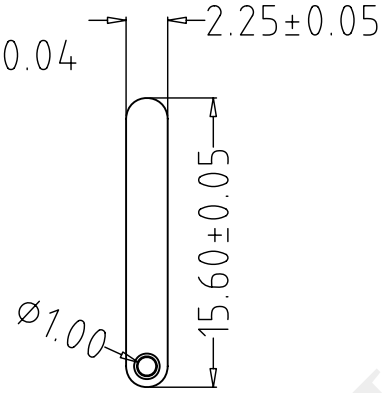

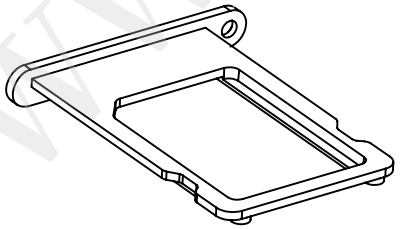

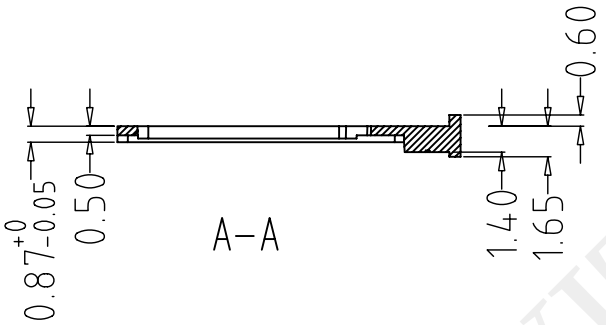

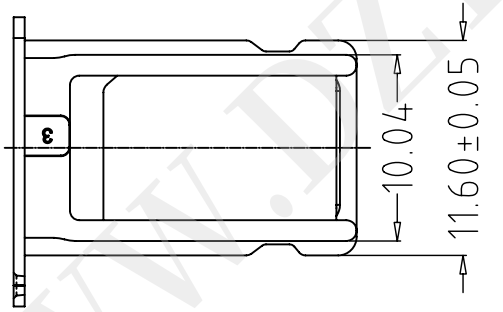

深圳市华宇创精密电子有限公司				
TOLERANCE: X.X ±0.30, X.XX ±0.25, X.XXX ±0.15, X.° ±2°, X.X° ±0.5°	DRAWED BY : 陈一鸣	DATE : 2014-02-23	PART NAME: NANO SIM 卡托	
	CHECKED BY: 马跃	DATE : 2014-02-23	PART NO.	HYC-017
			MOLD NO.	
UNIT: mm [inch]	APPROVED BY: 邱国夷	DATE : 2014-02-23	DRAW NO:	HYC-2010301630
SCALE:1:1 SIZE: A4			SHEET NO.	1 OF 1

WWW.DZYJZJ.COM