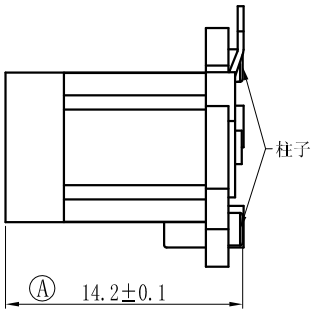

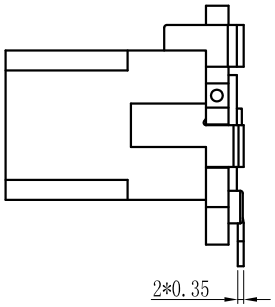

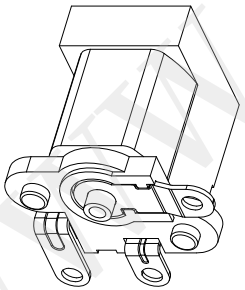

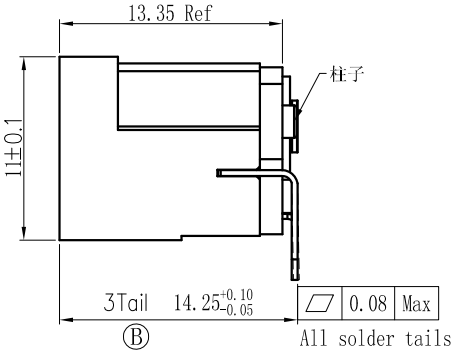

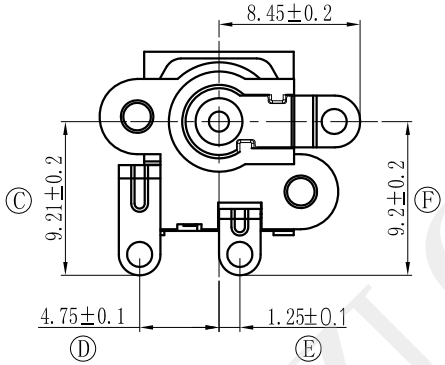

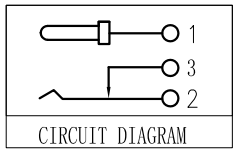

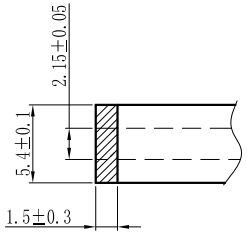

MATE PLUG

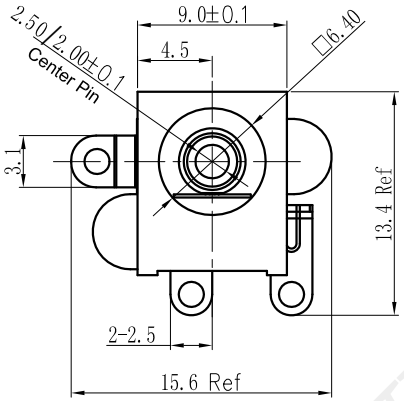

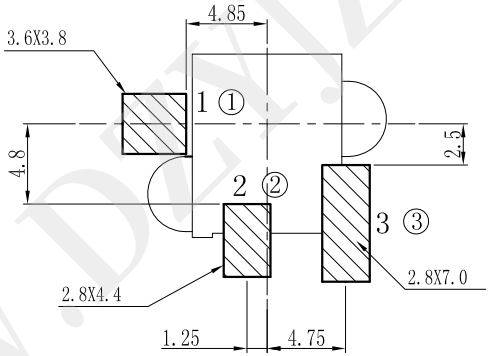

PCB LAYOUT TOP VIEW

SPECIFICATIONS:

1. ELECTRICAL CHARACTERISTICS:
   - 1-1. RATING:
   - 1-2. CONTACT RESISTANCE: 30mΩ MAX.(INITIAL)
   - 1-3. DIELECTRIC WITHSTANDING VOLTAGE: 500V AC FOR ONE MINUTE
   - 1-4. INSULATION RESISTANCE: 100MΩMIN. MEASURED BY 500V DC
2. MECHANICAL CHARACTERISTICS:
   - 2-1. INSERTION FORCE : 0.3~2.0 KGF
   - 2-2. WITHDRAWAL FORCE : 0.3~2.0 KGF
3. LIFE TEST: 5,000 CYCLES MIN.
4. FOR REFLOW SOLDERING LEAD-FREE PROCESS.
5. ＊REPRESENT CRITICAL DIMENSIONS.

深圳市华宇创精密电子有限公司

TOLERANCE: X.X ±0.30, X.XX ±0.25, X.XXX ±0.15, X.° ±2°, X.X° ±0.5°	DRAWED BY : 陈一鸣	DATE : 2014-02-23	PART NAME:	DC-05T立式贴片
	CHECKED BY: 马跃	DATE : 2014-02-23	PART NO.	HYC-DC05T-XXX
			MOLD NO.	
UNIT: mm [inch]	APPROVED BY: 邱敏	DATE : 2014-02-23	DRAW NO:	HYC-2112011809
SCALE:1:1 SIZE: A4			SHEET NO.	1 OF 1

WWW.DZYJZJ.COM