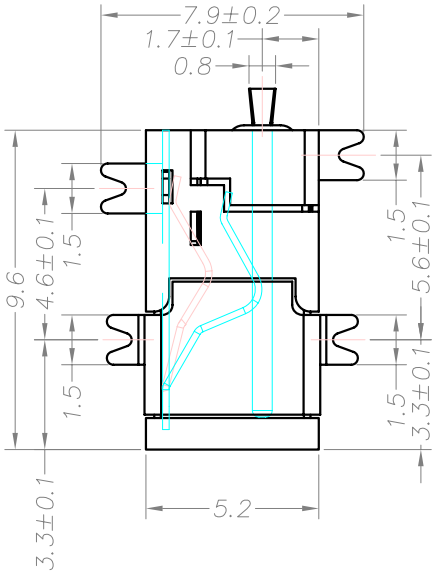

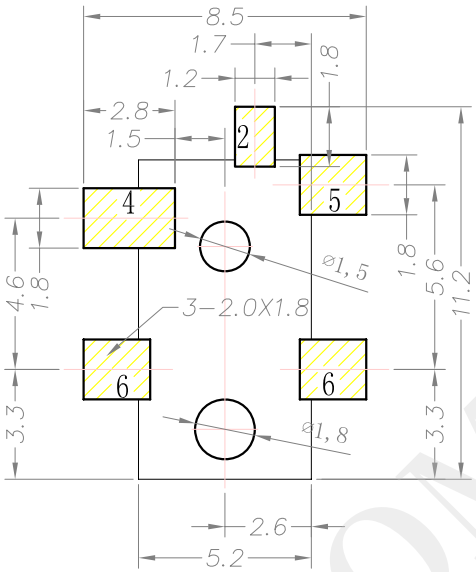

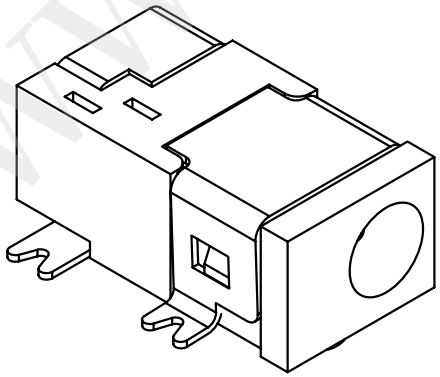

P.C.B LAYOUT TOP VIEW

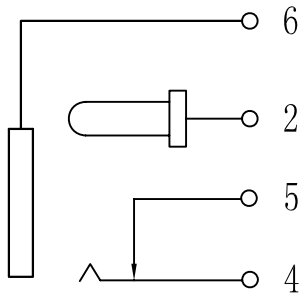

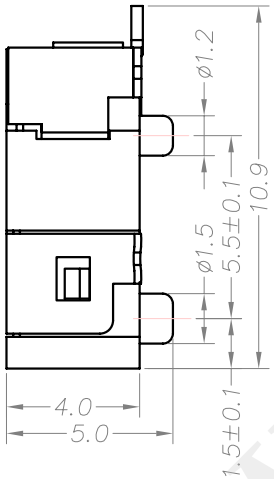

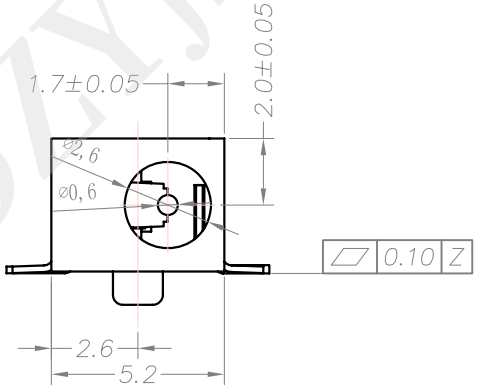

深圳市华宇创精密电子有限公司

TOLERANCE: X.X ±0.30 X.XX ±0.25 X.XXX ±0.15 X.° ±2° X.X° ±0.5°	DRAWED BY : 陈一鸣	DATE : 2014-02-23	PART NAME: DC-041
	CHECKED BY: 马跃	DATE : 2014-02-23	PART NO. HYC-DC041-060
			MOLD NO.
UNIT: mm [inch]	APPROVED BY: 邱国夷	DATE : 2014-02-23	DRAW NO: HYC-DC13082701
SCALE:1:1 SIZE: A4			SHEET NO. 1 OF 1

WWW.DZYJZJ.COM